The new era of Decentralized Wireless Mesh Networks

Lukonin Kirill

Why so long…?

- WMN not always decentralized
- MANET is not always a mesh.
- No way to sync 50k nodes.
- DWMN, why not ?!

The story

- Packet Radio, SURAN, 1,8 Ghz, 3,1 Mbit
- DSDV, AODV, OLSR, BATMAN, 802.11s
- GUIFI, OLPC, FabFi, African WUG, Freifunk
- Google Loon.

Usage patterns

- Balloons

Baloons

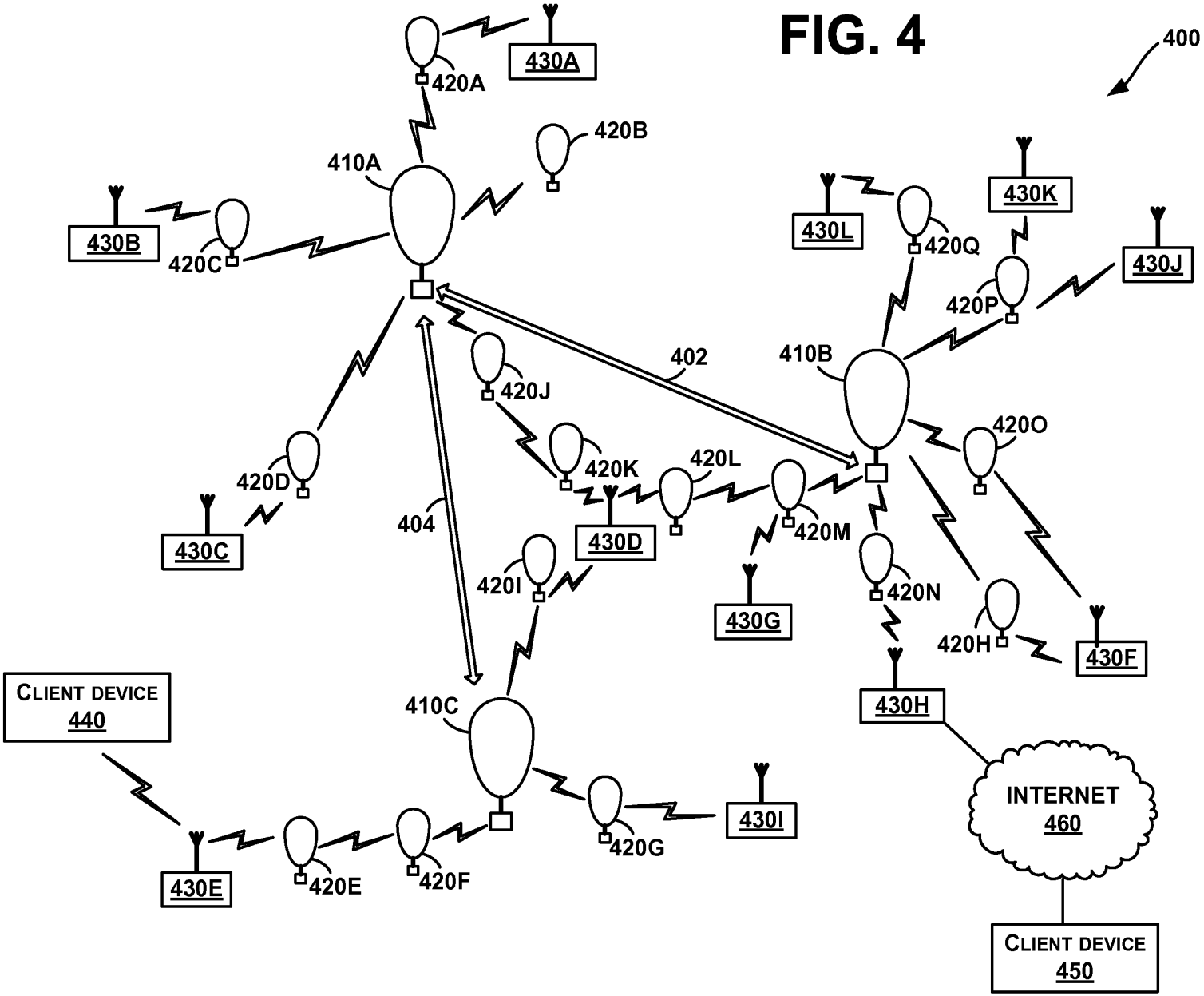
FIG. 4
400
430A
420A
420B
410A
430B
420C
430L
420Q
430K
430J
420P
402
410B
420J
420O
420K
420L
420D
404
430D
420M
430C
420I
420N
430G
420H
430F
CLIENT DEVICE
440
410C
430H
INTERNET
460
430I
420G
430E
420E
420F
CLIENT DEVICE
450

Usage patterns

- Balloons
- Vehicles

Vehicles

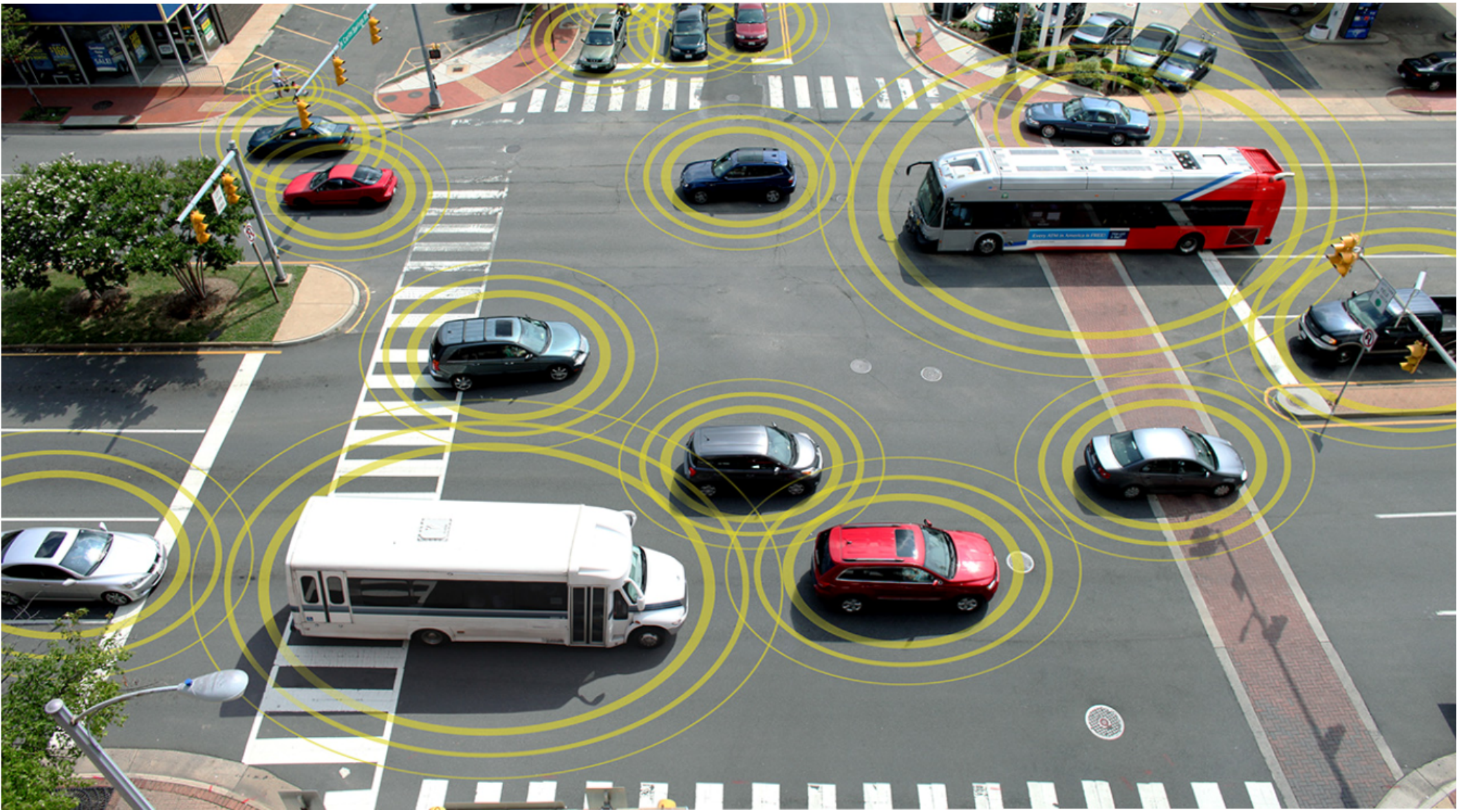

Usage patterns

- Balloons
- Vehicles
- Countryside

Countryside

Usage patterns

- Balloons
- Vehicles
- Countryside
- Homes and EXPO areas

•Homes

•EXPO areas

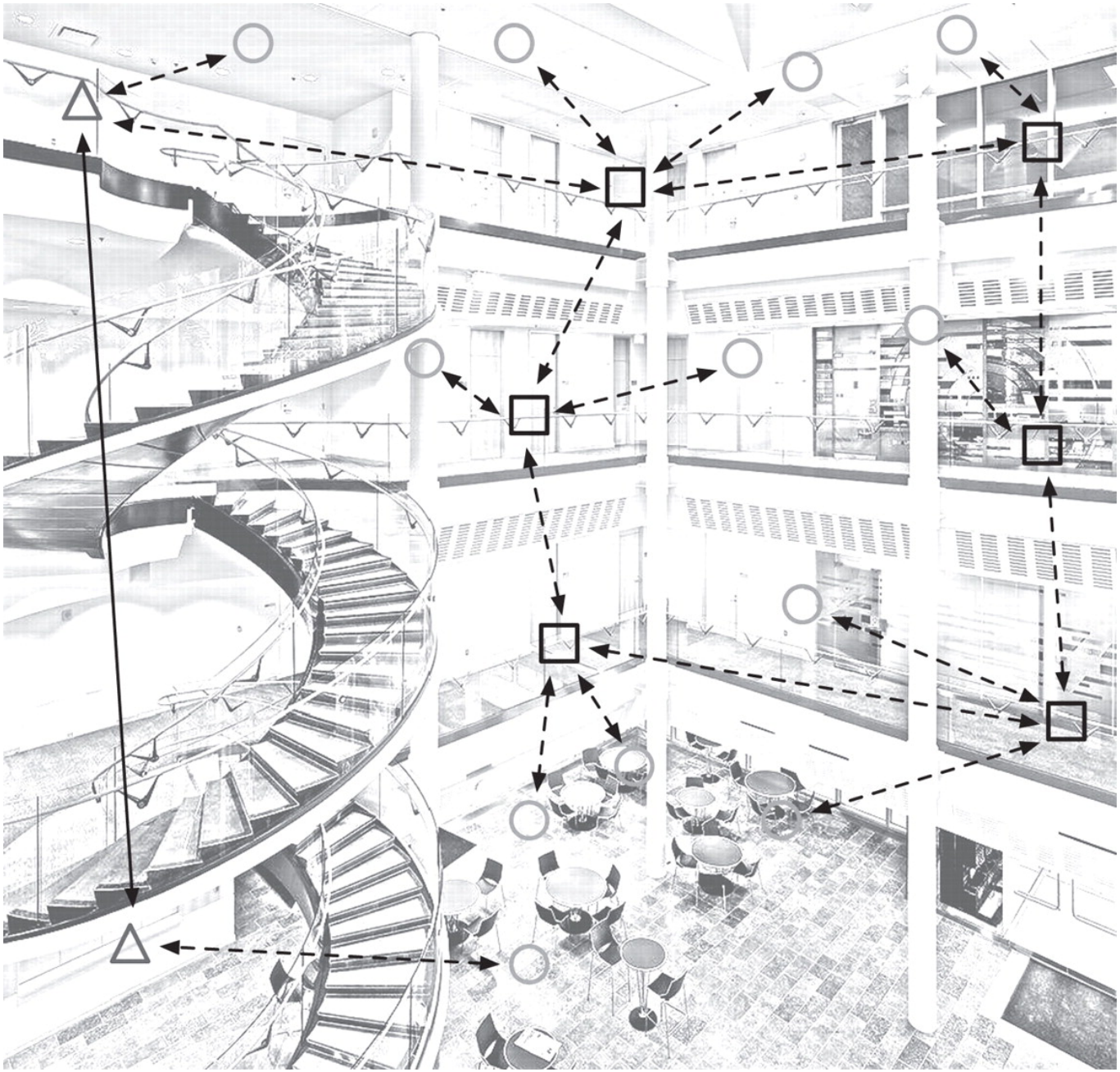

Usage patterns

- Balloons
- Vehicles
- Countryside
- Mine and dump trucks

Usage patterns

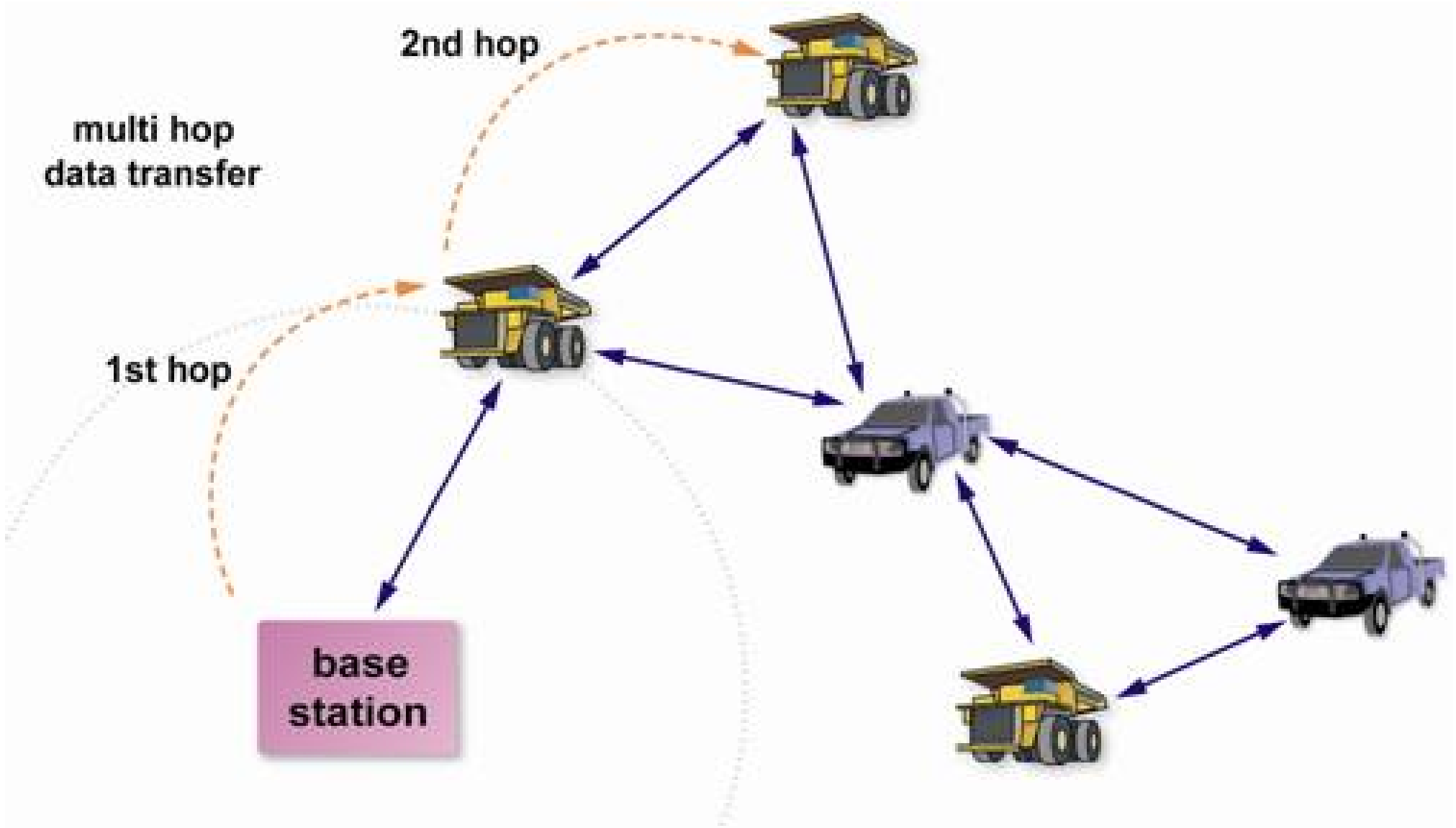

Usage patterns

- Balloons
- Vehicles
- Countryside
- Mine dump trucks
- Unmanned aerial vehicles

Where to use

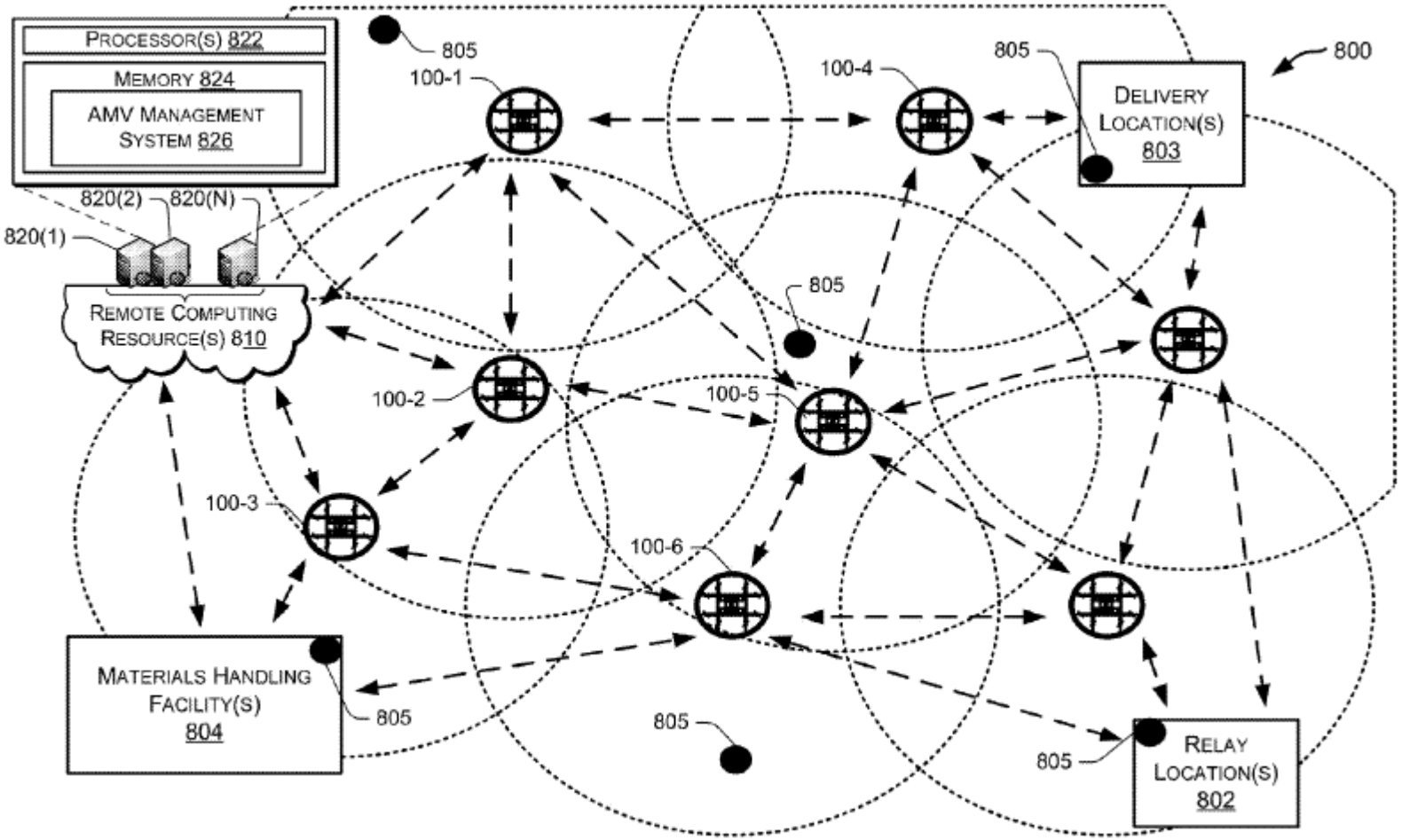

FIG. 8

Usage patterns

- Balloons
- Vehicles
- Countryside
- Mine dump trucks
- Industrial facilities

•Industrial facilities

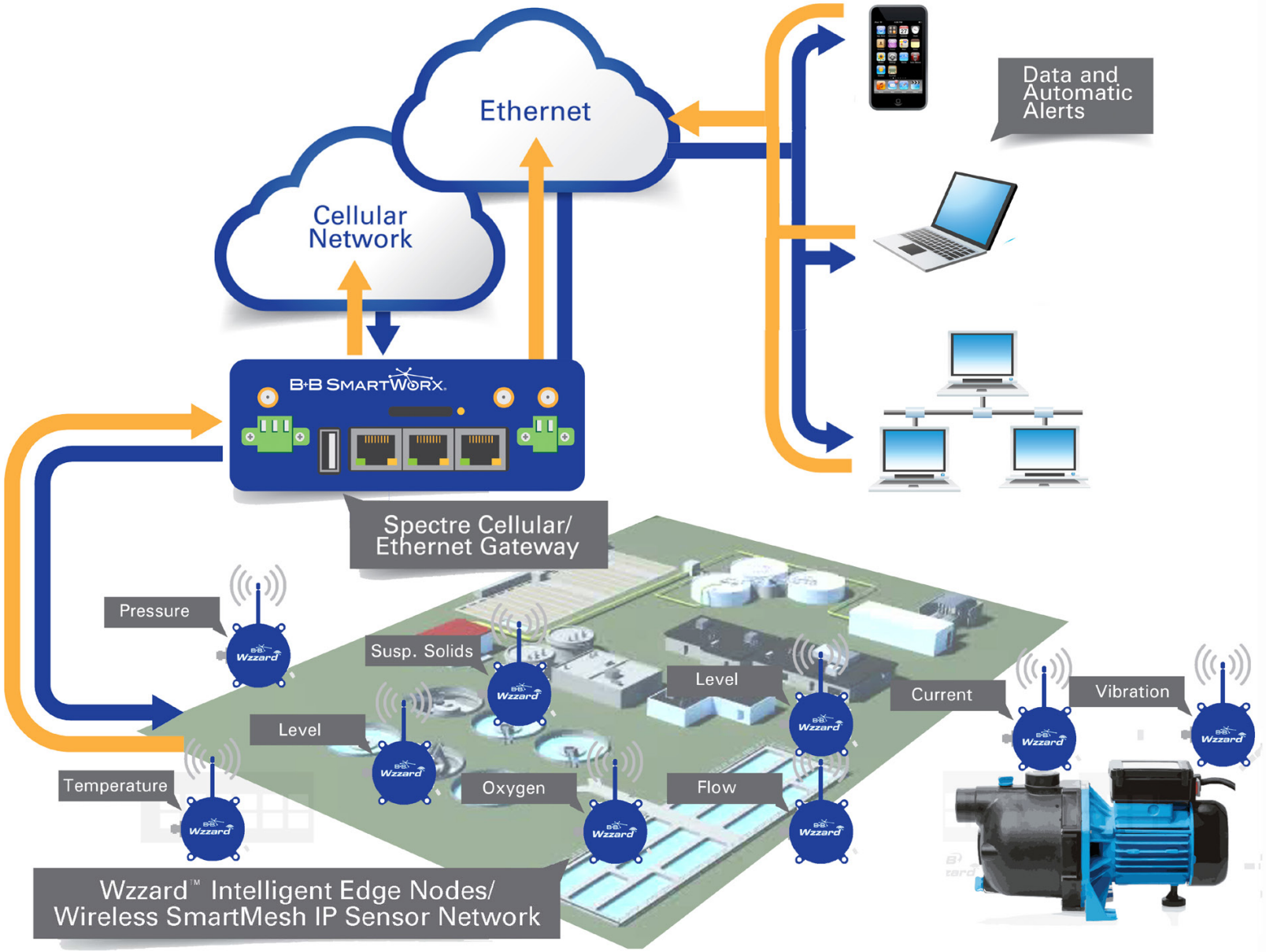

Usage patterns

- Balloons
- Vehicles
- Countryside
- Mine and dump trucks
- Industrial facilities

BATMAN-ADV

BATMAN-ADV

- Network coding

Network Coding

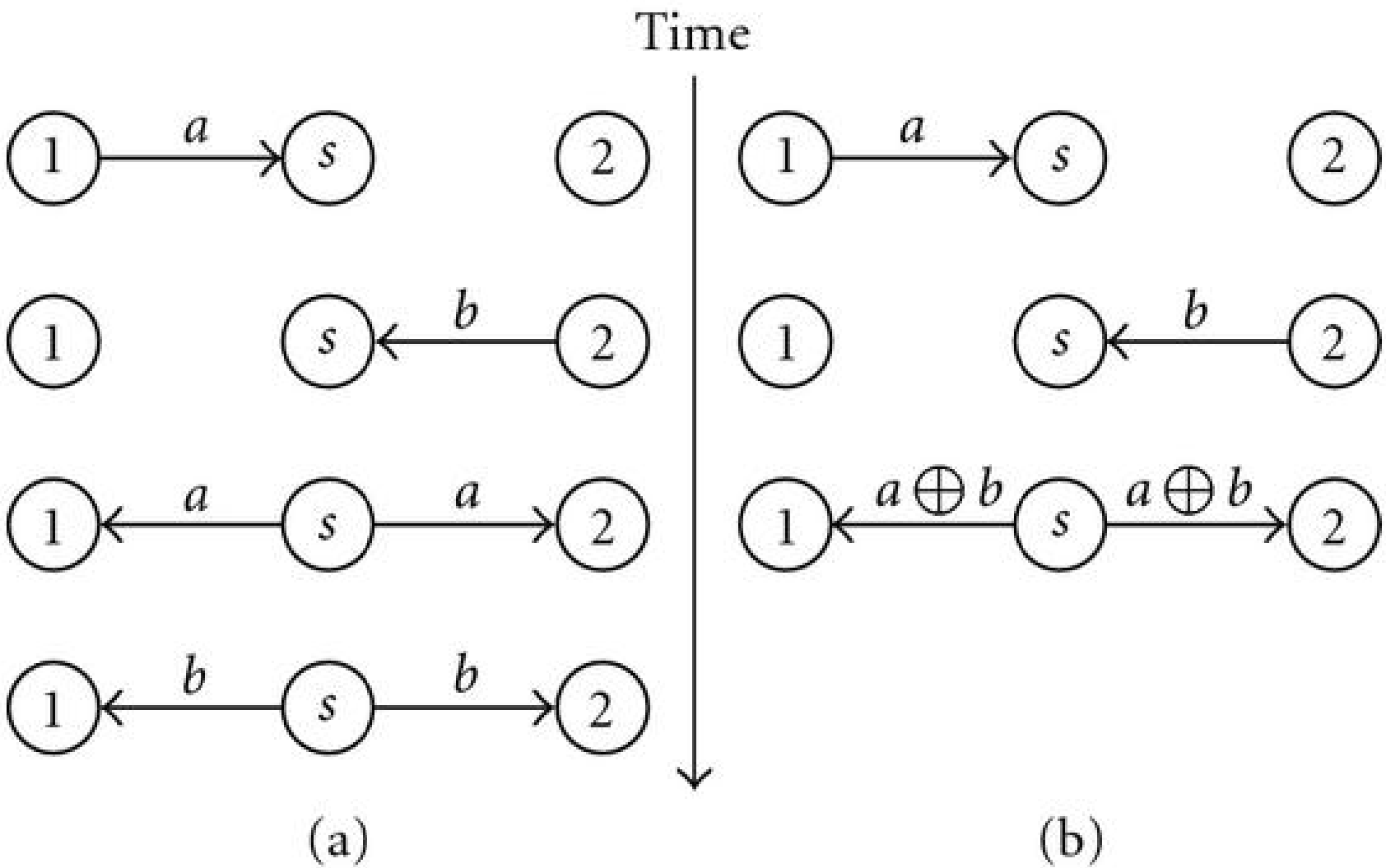

BATMAN-ADV

- Network coding
- Client roaming

Client Roaming

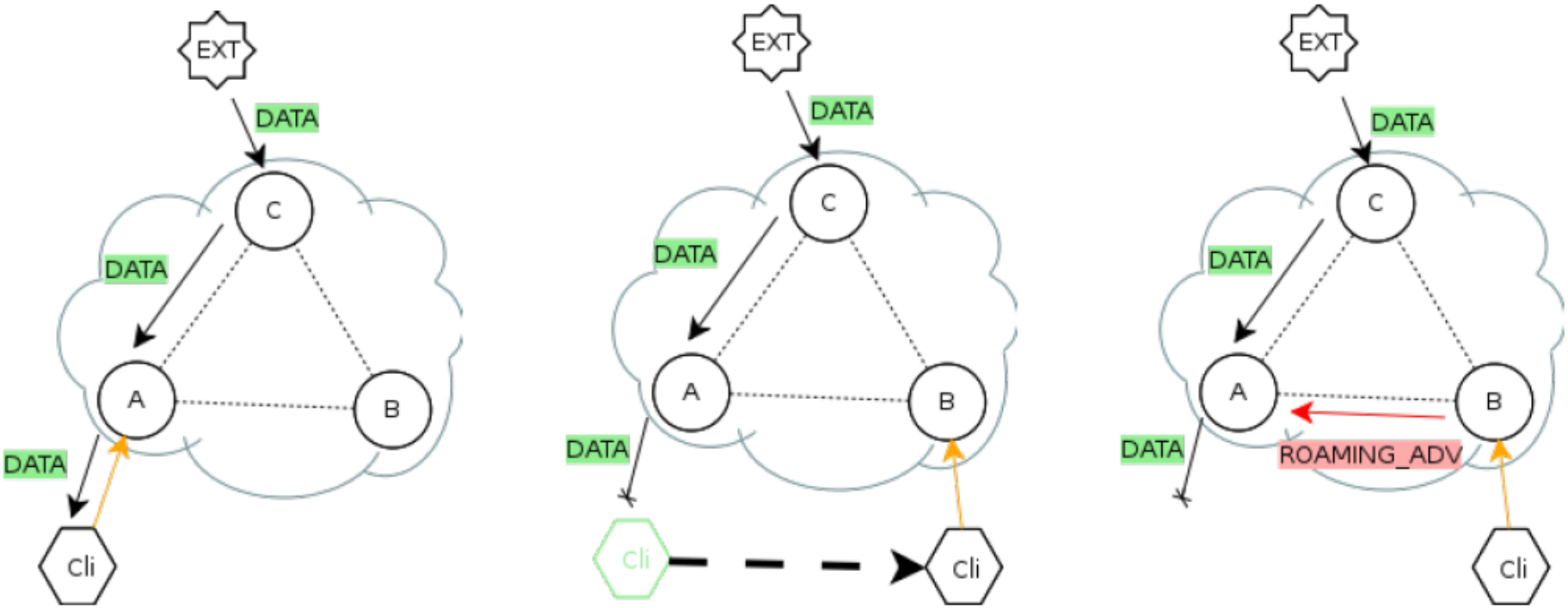

Client Roaming

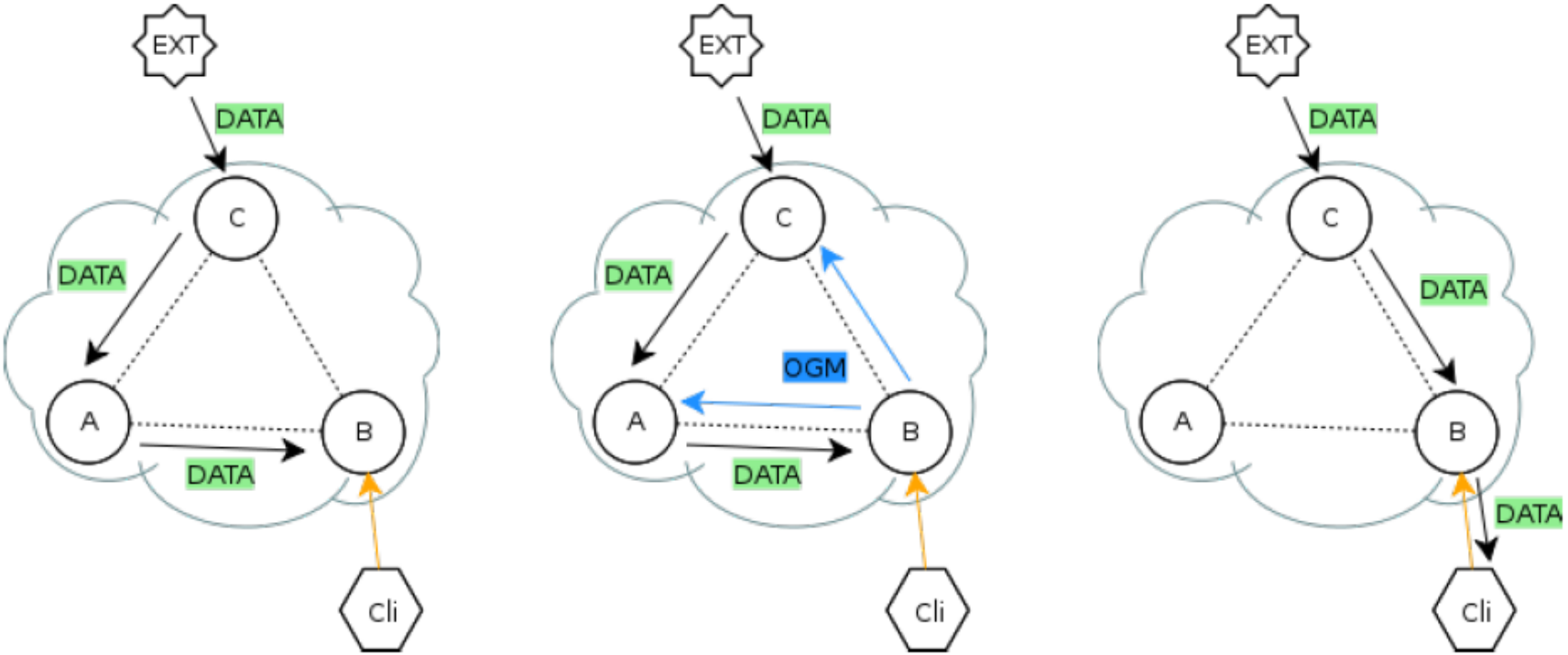

BATMAN-ADV

- Network coding
- Client roaming
- Distributed ARP table

•Distributed ARP table

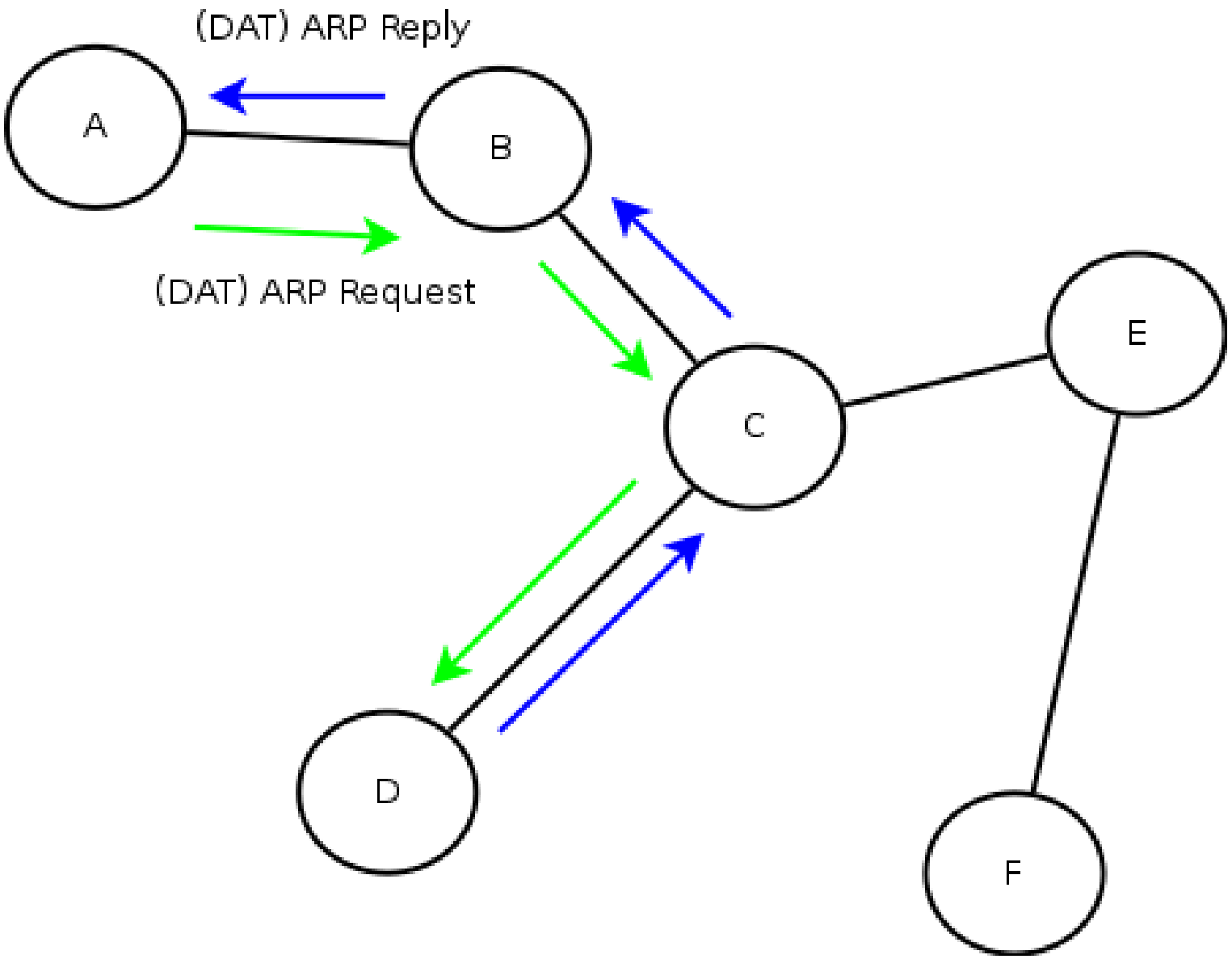

BATMAN-ADV

- Network coding
- Client roaming
- Distributed ARP table
- Link quality based metrics

•Link quality based metrics

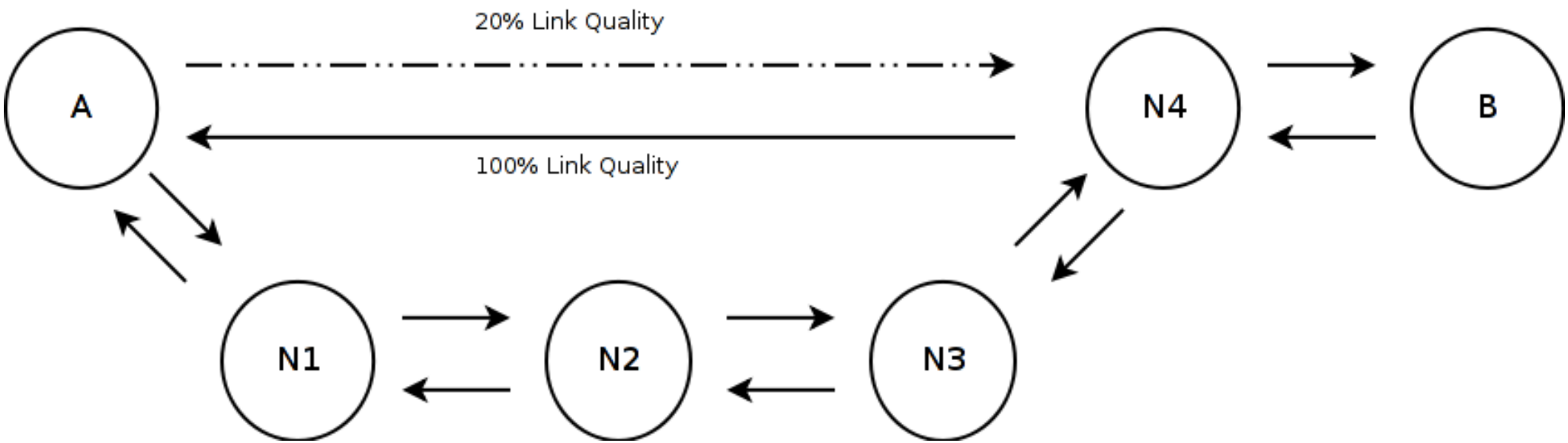

BATMAN-ADV

- Network coding
- Client roaming
- Distributed ARP table
- Link quality based metrics
- VLANS

BATMAN-ADV

- Network coding
- Client roaming
- Distributed ARP table
- Link quality based metrics
- VLANS
- Bonding

BATMAN-ADV

- Network coding
- Client roaming
- Distributed ARP table
- Link quality based metrics
- VLANS
- Bonding
- IGMP/MLD snooping

What’s inside

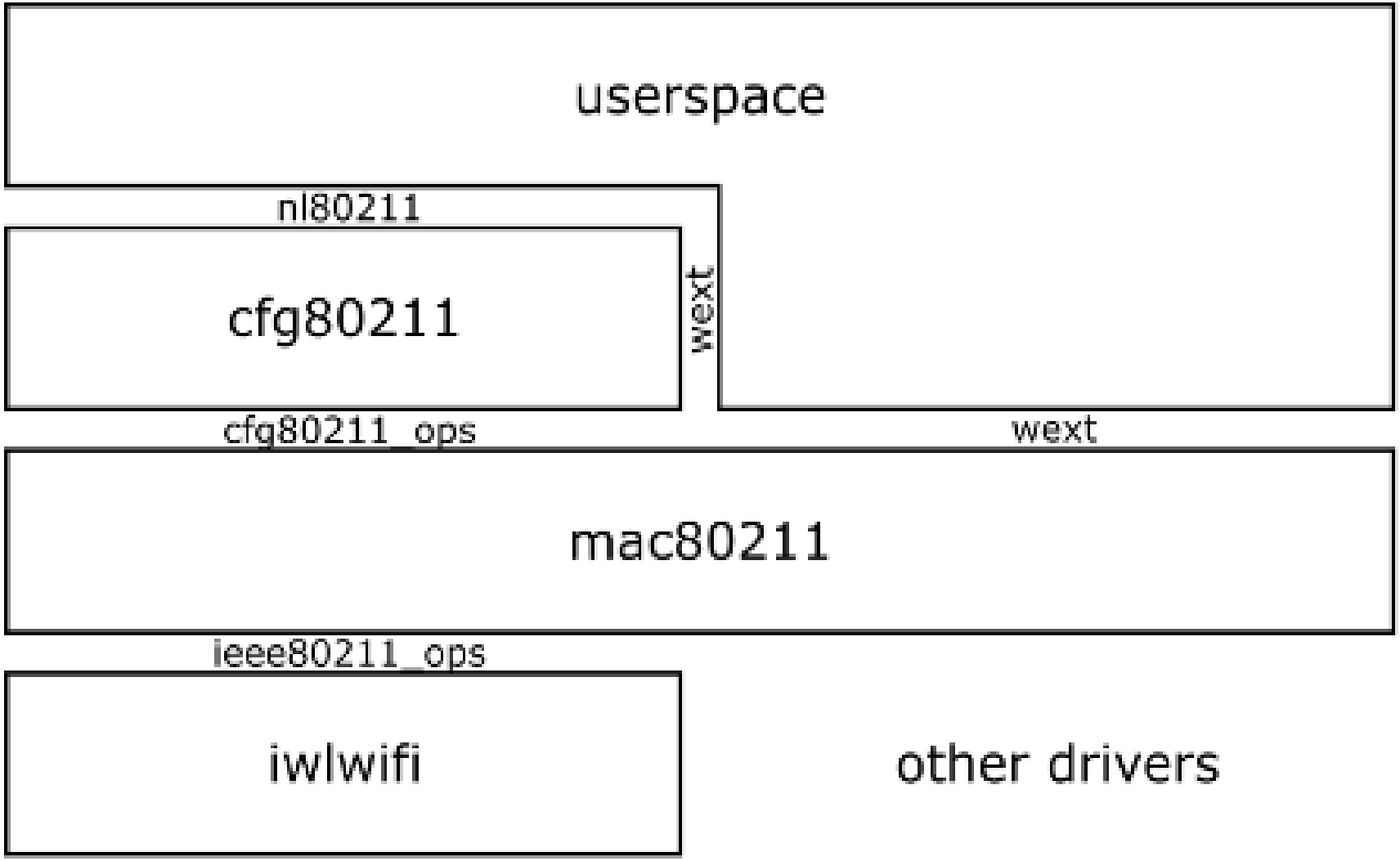

What’s inside

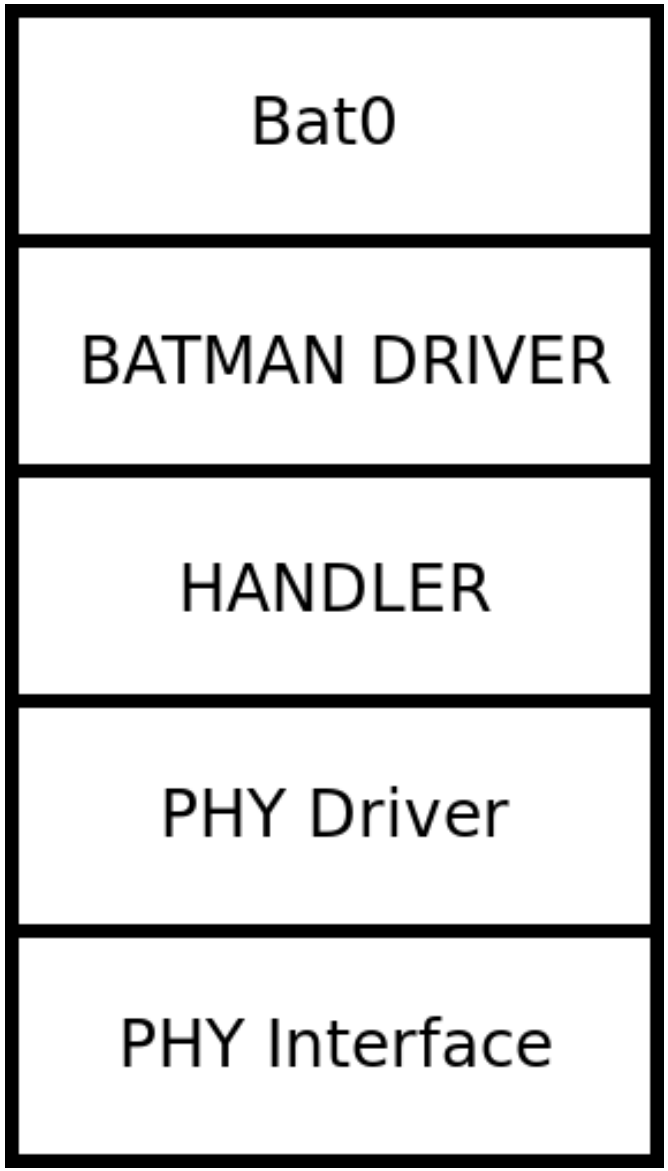

Best practices

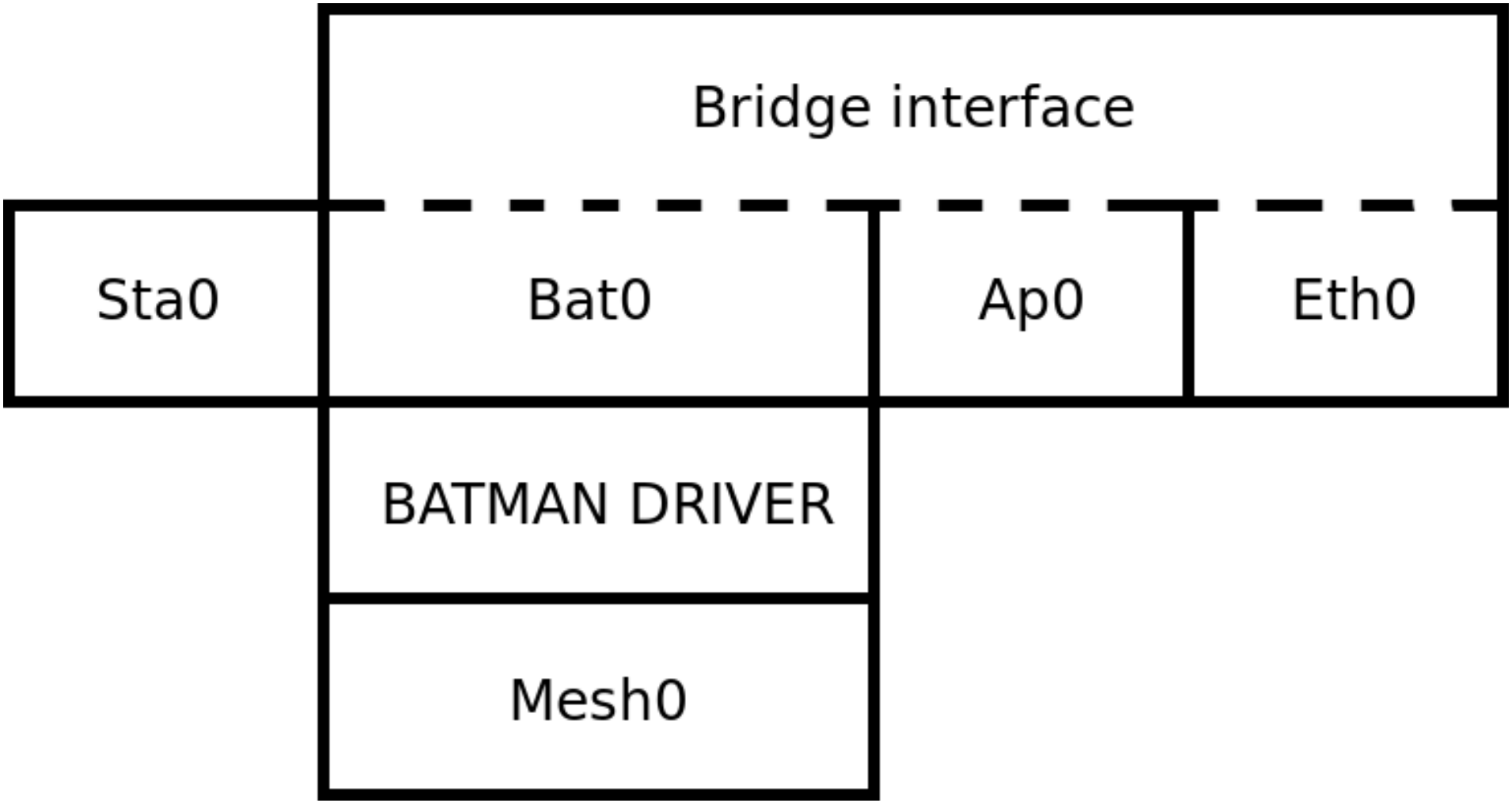

Best practices

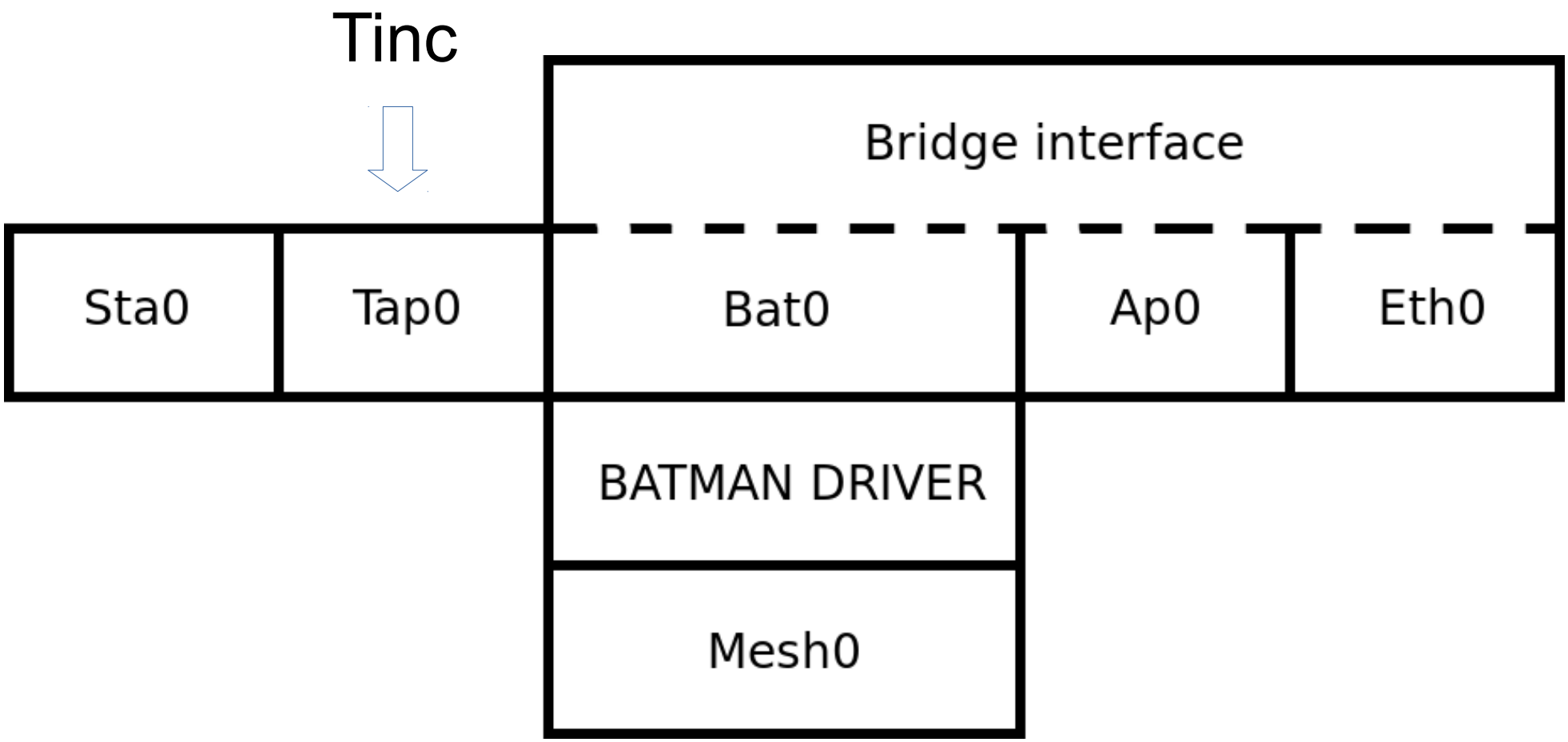

Airtime Fairness

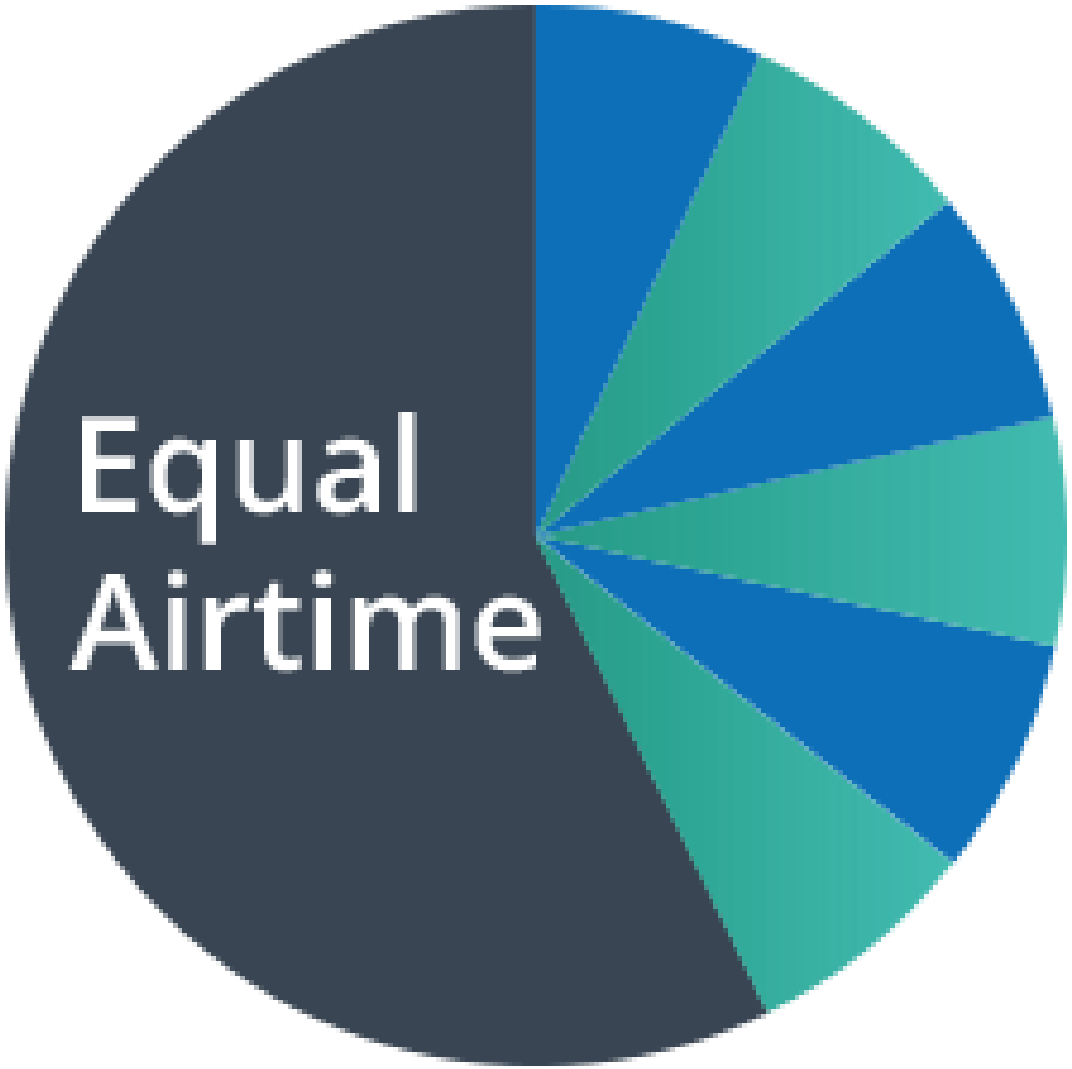

Airtime Fairness

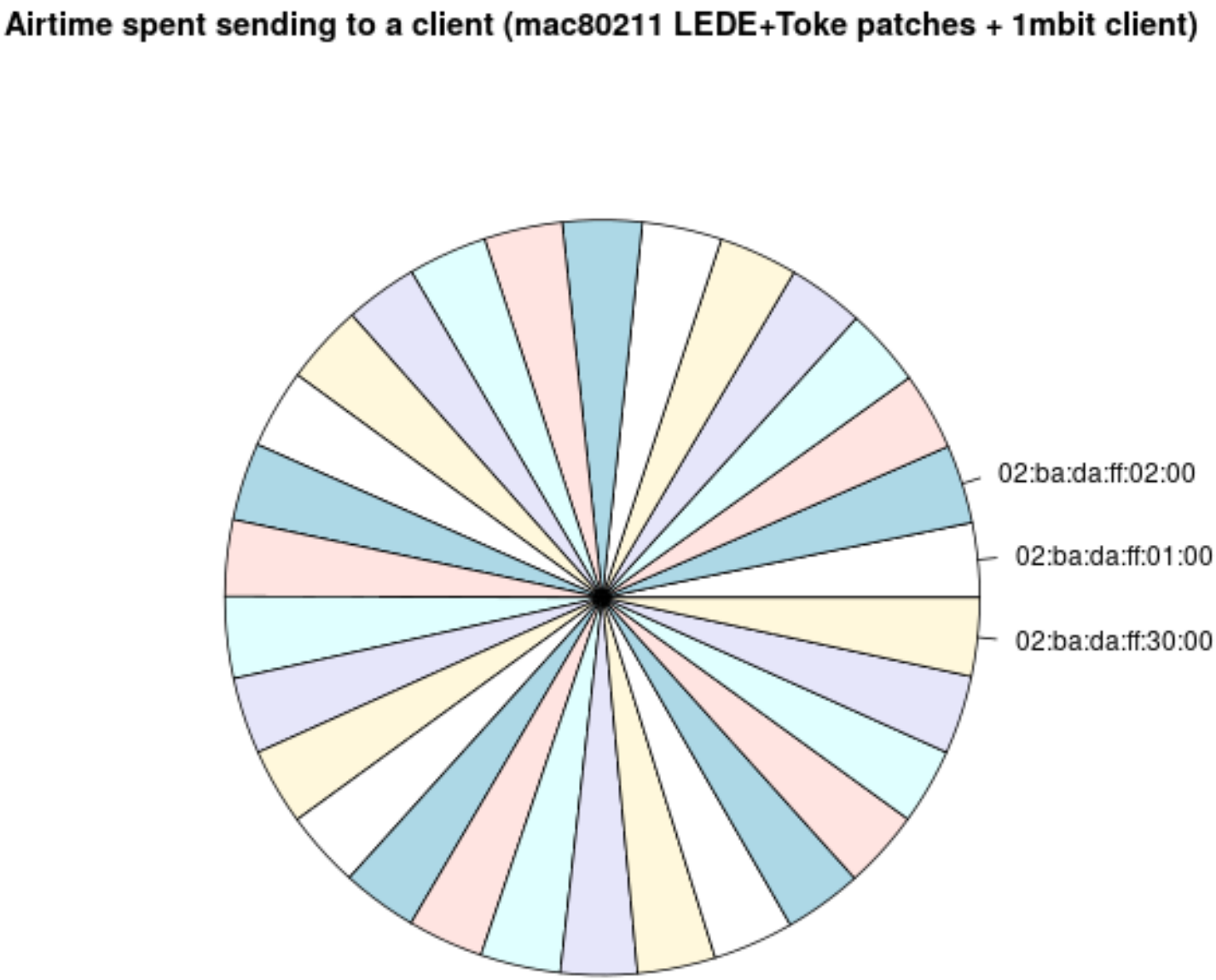

Hardware

- Ath9k works perfectly

https://wireless.wiki.kernel.org/en/users/Drivers/ath9k

AR9331, AR9344

Ath10k works great for 802.11ac and QCA chips.

- Mt76 can’t support AP+AdHoc

Ralink RT3050(F), RT3052(F), RT5350(F),MT7620

Hardware

- Ath9k works perfectly

https://wireless.wiki.kernel.org/en/users/Drivers/ath9k

AR9331, AR9344

Ath10k works great for 802.11ac and QCA chips.

- Mt76 can’t support AP+AdHoc

Ralink RT3050(F), RT3052(F), RT5350(F),MT7620

- Realtek does not support AP mode
- Don’t use Broadcom
- Don’ use Ath9k-htc

Some advices

- Orig interval depends on node type.

  0,5s to 5s
- Dumb roaming about 100ms
- Increase min bitrate to 11 mbps
- WMME helps
- Use VLANs

Some advices

- Don’t use brctl
- UCI is your bro!
- Openwrt/LEDE is the best solution
- Use 4.4+ kernel
- *git clone* https://git.lede-project.org/source.git

Thank you!

- https://www.open-mesh.org
- https://www.bufferbloat.net/projects/make-wifi-fast/
- https://blog.tohojo.dk
- http://blog.cerowrt.org
- https://wikidevi.com
- https://wireless.wiki.kernel.org

Lukonin Kirill
klukonin@gmail.com